2015 SECONDARY HARNESSES

CONNECTOR LOCATION	
1	ENGINE RELATED CONNECTORS
2	LH SIDE PANEL
3	RH SIDE PANEL
4	HANDLEBAR AREA
5	BEHIND MULTIFUNCTION GAUGE
6	REAR PART OF FRAME

COLOR CODE	
BG	BEIGE
BK	BLACK
BN	BROWN
BU	BLUE
GN	GREEN
GY	GRAY
OG	ORANGE
PK	PINK
RD	RED
VT	VIOLET
WH	WHITE
YE	YELLOW
LT	LIGHT COLOR
JT	JUNCTION/SPLICE

ACS SUSPENSION

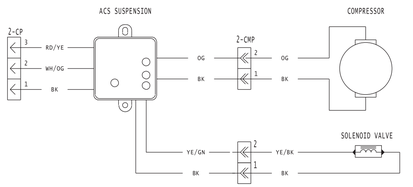

REAR ACCESORIES T HARNESS

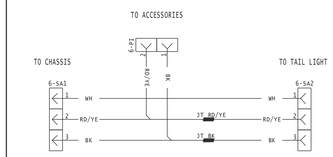

COOLING FAN HARNESS

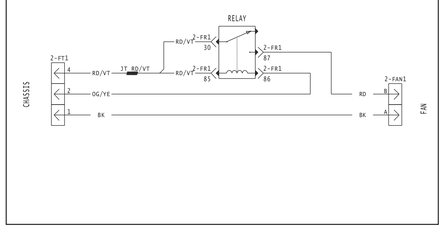

HEADLAMP HARNESS (REV-XS, REV-XM)

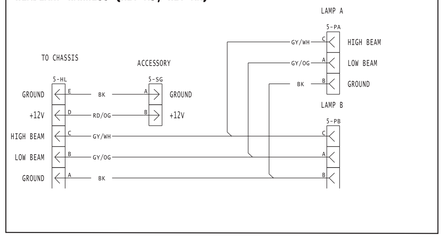

FRONT SEAT HARNESS

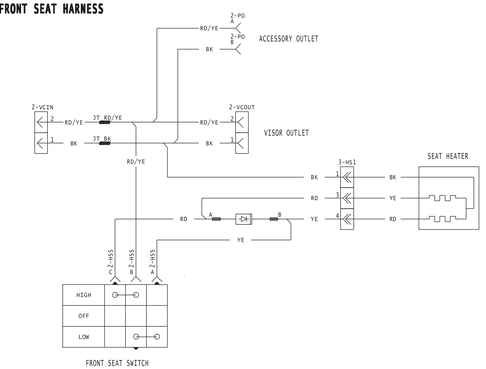

ELECTROMECANICAL REVERSE

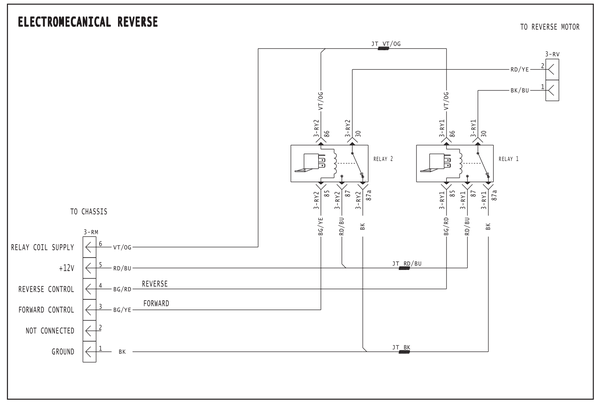

2014 REV-XR STEERING HARNESS

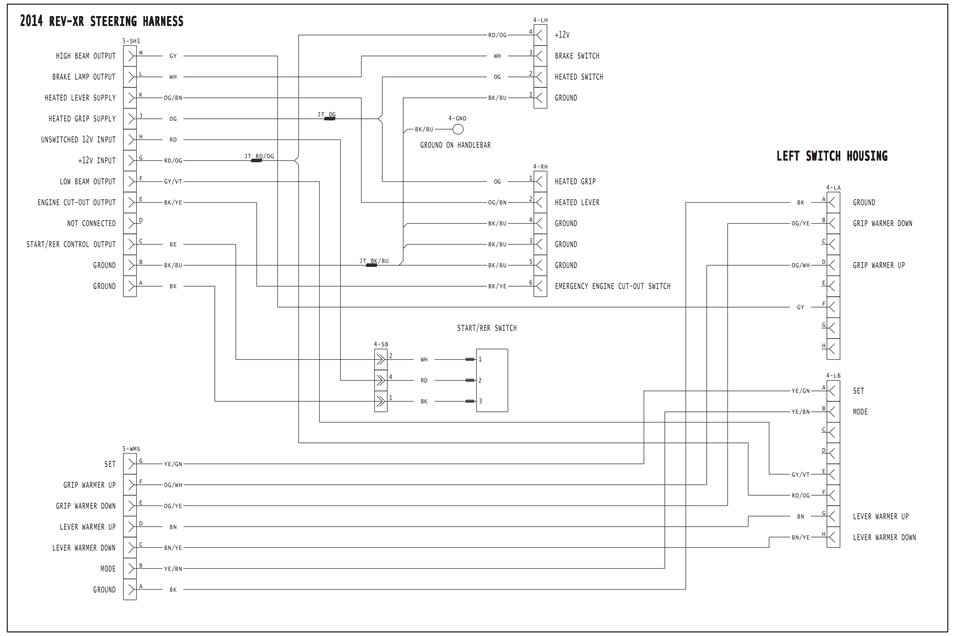

2015 REV-XS PREMIUM SWITCH HOUSING

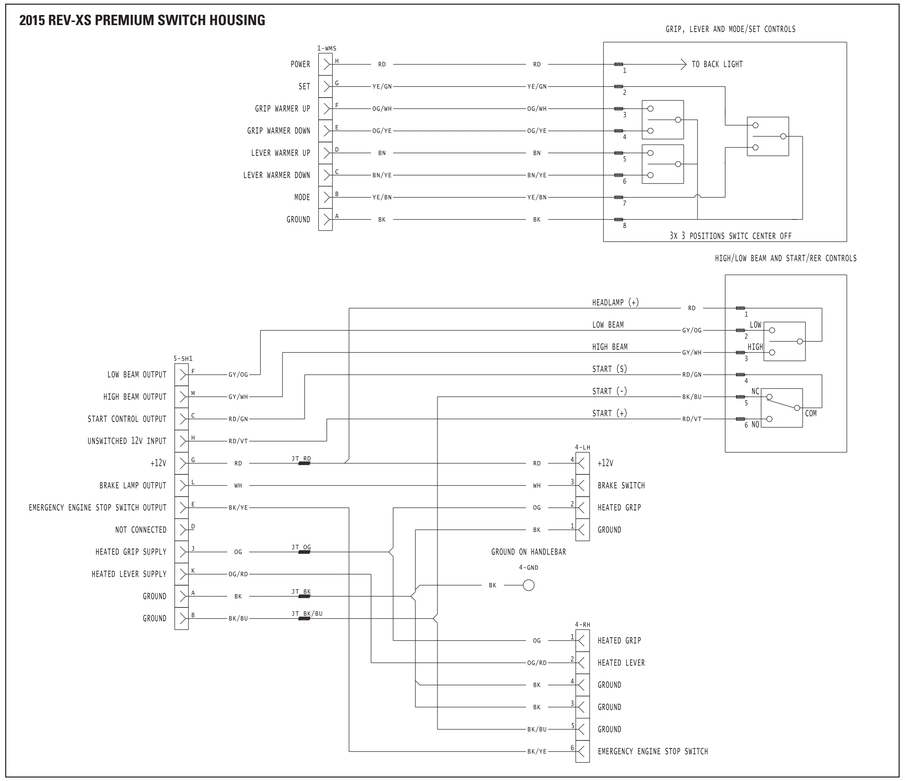
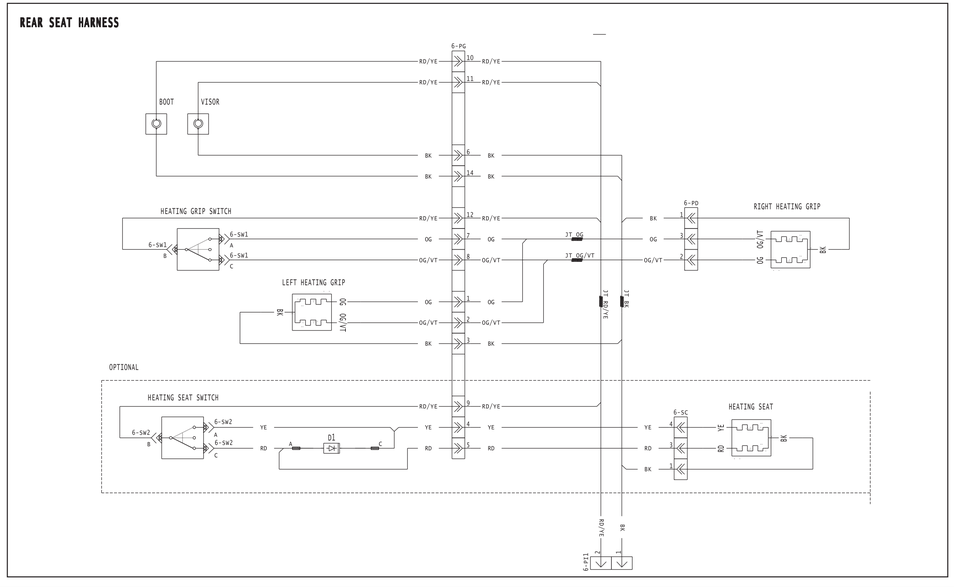
REAR SEAT HARNESS